Did you know...

Your water can become contaminated if connections to your plumbing system are not properly protected!

The purpose of the local Cross-Connection Control Program, as required by State Plumbing Code and Regulations, is to ensure that everyone in the community has safe, clean drinking water.

Public Health & Safety....

To avoid contamination, backflow preventers are required by state plumbing codes wherever there is an actual or potential hazard for a cross-connection. The Wisconsin Department of Natural Resources requires all public water suppliers to maintain an on-going Cross-Connection Control Program involving public education, onsite inspections, and possible corrective actions by building owners if required.

More Information

WI Department of Commerce
www.commerce.state.wi.us/

WI Department of Natural Resources
www.dnr.wi.gov

Environmental Protection Agency (EPA)
www.epa.gov

Cross-Connection Control / Backflow Prevention
www.hydrodesignsinc.com/wiccc.html

Village of Brandon
Department of Public Works
115 N. Center St.
Brandon, WI 53919
(920) 346-5415

Drinking Water Information



Residential Water User Cross-Connection Hazards

Bathrooms & Kitchens

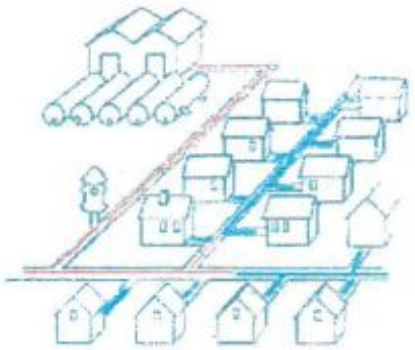

We're All Connected.....

Maintaining the integrity of your public drinking water system.

What is a Cross-Connection?

A cross-connection is an actual or potential connection between the safe drinking water (**potable**) **supply and a** source of contamination or pollution. State plumbing codes require approved backflow prevention **methods to be** installed at every point of potable water connection and use. Cross-Connections must be **properly protected or** eliminated.

How does contamination occur?

When you turn on your faucet, you expect the water to be as safe as when it left the treatment **plant. However, certain** hydraulic conditions left unprotected within your plumbing system may allow hazardous **substances to contaminate** your own drinking water or even the public water supply.

Water normally flows in one direction. However, under certain conditions, water can **actually flow backwards; this is** known as Backflow. There are two situations that can cause water to flow backward: **back siphonage and backpressure.**

Backsiphonage

May occur due to a loss of pressure in the municipal water system during a fire **fighting emergency, a water main** break or system repair. This creates a siphon in your plumbing system which can **draw water out of a sink or bucket and** back into your water or the public water system.

Backpressure

May be created when a source of pressure (such as a boiler) creates a pressure **greater than the pressure supplied** from the public water system. This may cause contaminated water to be pushed **into your plumbing system through an** unprotected cross-connection.

In the Bathroom - Hand Held Shower Fixture

The hand held shower fixture is compliant if:

- **When shower head is hanging** freely, it is at least 1" above top of the flood level rim of the receptor (tub)
- Complies with **ASSE#1014**
- Has the **ASME code 112.18.1** stamped on the handle



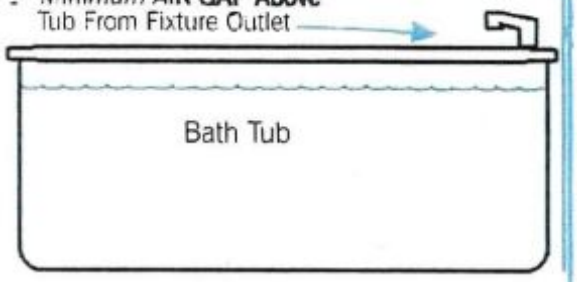

In the Bathroom - Toilet Tanks

There are many unapproved toilet tank fill valve products sold at common retailers which do not meet the state plumbing code requirements for backflow prevention.

- **Look for the ASSE #1002 Standard symbol on the device and packaging**
- **Replace any unapproved devices with an ASSE #1002 approved anti siphon ball-cock assembly. Average cost is typically $12 to $22 at home improvement stores**
- **Verify overflow tube is one inch below critical level (CL) marking on the device**

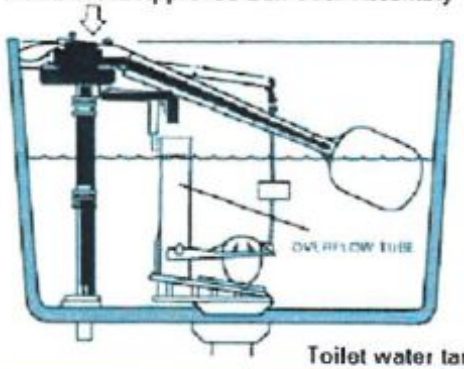

Toilet water tank

Insights to protect your drinking water

Do...

- Keep the ends of hoses clear of all possible contaminants.
- Make sure dishwashers are installed with a proper "air gap" device.
- Verify and install a simple hose bibb vacuum breaker on all threaded faucets around your home.
- Make sure water treatment devices such as water softeners have the proper "air gap", which is a minimum of one inch above any drain.



Hose bibb Vacuum Breaker

Don't...

- Submerge hoses in buckets, pools, tubs, sinks or ponds.
- Use spray attachments without a backflow prevention device.
- Connect waste pipes from water softeners or other treatment systems directly to the sewer or submerged drain pipe. Always be sure there is a one inch "air gap" separation.

Air Gap →



In the Kitchen

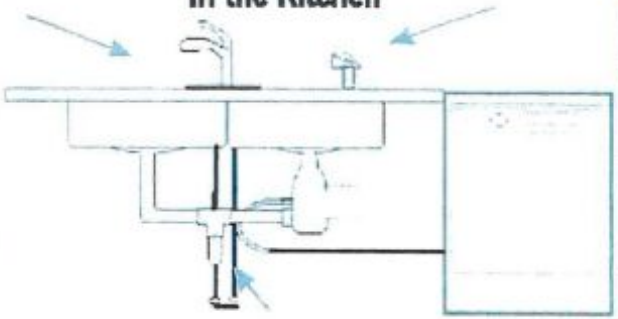

Hoses and water treatment devices may create a potential backflow hazard if not properly isolated with backflow prevention methods.